5 Aligning Cartridges

Before using the printer you will need to align the cartridges for optimal print quality.

1. Open the printer tray by pressing the Disc Tray Button.

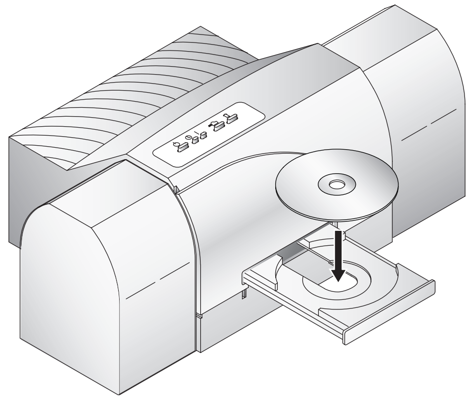

2. Place a disc on the tray.

3. Click **Start** then **Printers and Faxes** (found under Control Panel in Windows 2000 and XP Home).

4. Right-click on **CD/DVD Printer 6** and click **Printing Preferences**.

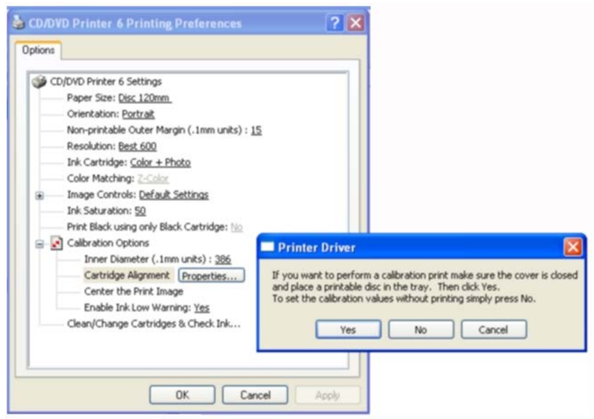

5. Locate **Cartridge Alignment** and click **Properties** then click **Yes** to print the alignment disc.

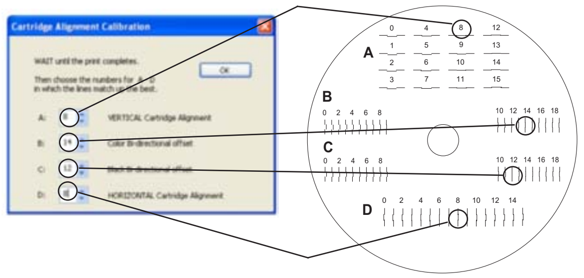

6. Once the disc has finished, take the values that line up on the disc and enter them into the Calibration dialog box.

NOTE: The default driver settings for the Signature Z6 ensure optimal quality. Other settings are available that will print faster and use less ink while printing at a slightly lower quality. Please consult the manual for more information on driver settings.

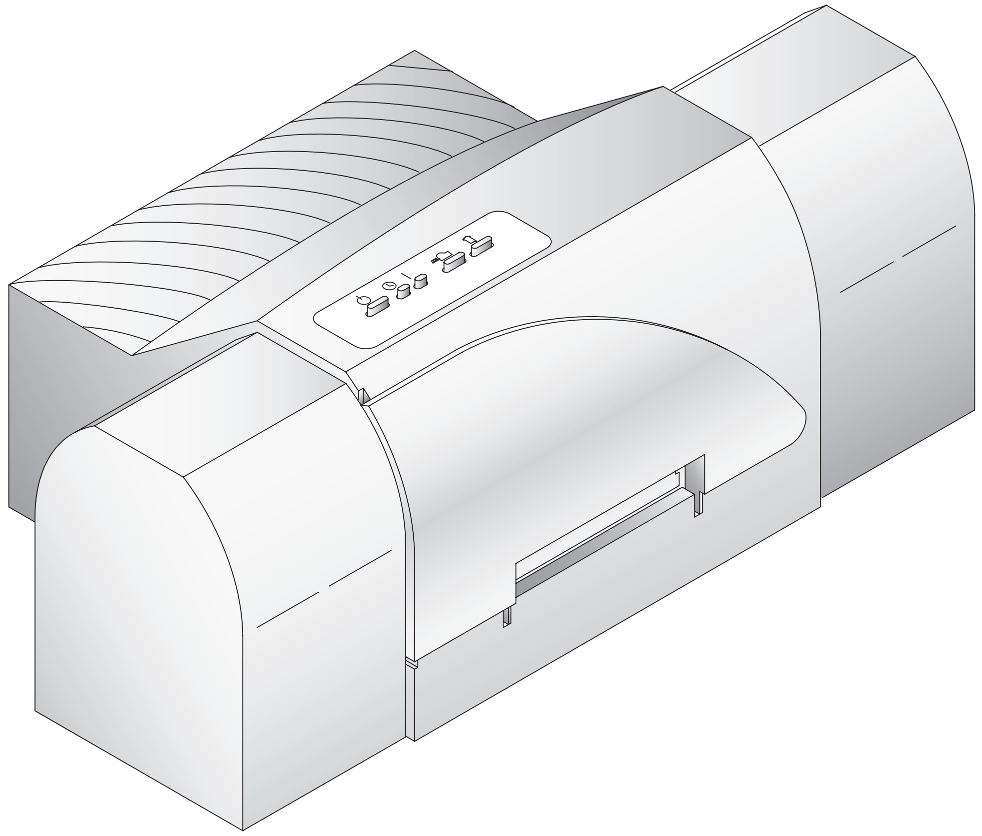

CD/DVD Printer 6

Quick Start

P/N 510907-051904

1 Unpack Your Printer

- Printer
- PowerAdapter
- Printer Software CD
- CMY Color Ink Cartridge
- Kcm Photo Color Ink Cartridge
- Warranty Statement & Registration Card
- User's manual and other printed information

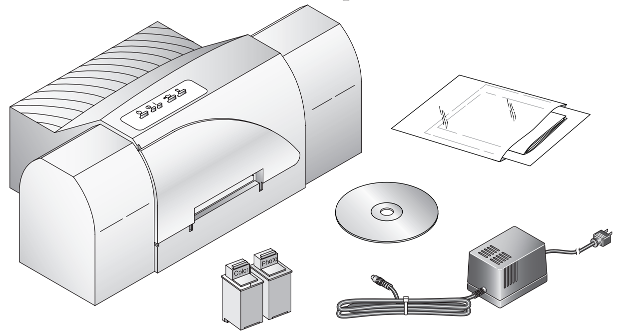

2 Apply Power

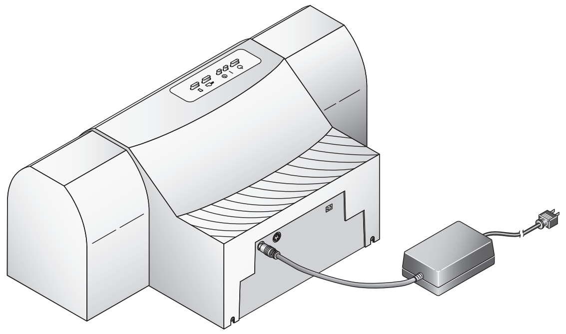

3 Install Cartridges

1. Open Cover

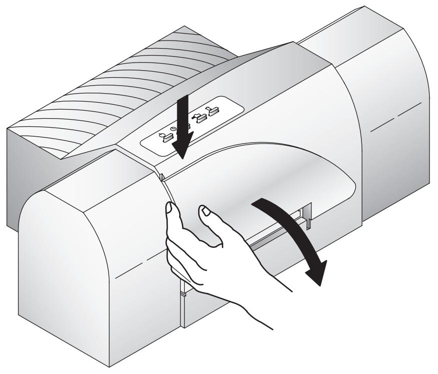

2. Open Cartridges. Peel protective tape from cartridge.
3. Press Cartridge Button on Printer.
4. Insert the CMY color ink cartridge into the left cartridge carrier position, and the Kcm Photo Cartridge in the right cartridge carrier position copper end first. Push the cartridges back until the cartridges snap into place.

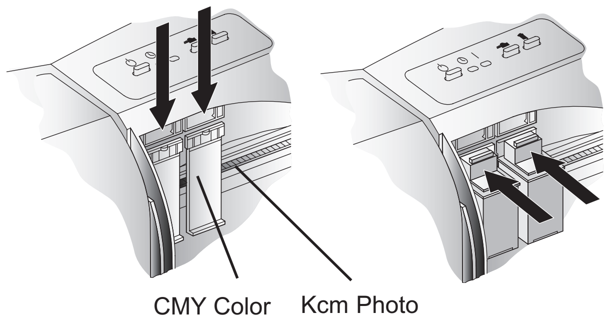

4 Install Printer Driver

SureThing CD/DVD Disc Labeling Software for CD/DVD Printer 6

1. Insert CD into your computer.

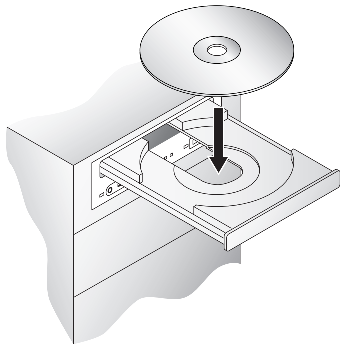

In a few moments the installer program should launch automatically. If not, perform the following steps:

- Double-click the My Computer Icon, then doubleclick the icon of the appropriate CD drive containing the Software Installer disc
- Double-click **install.exe** the Installer Application, click the QuickStart Install

2. Follow onscreen instructions to install software shown below:
   - With the printer plugged in and turned on, connect the USB Cable

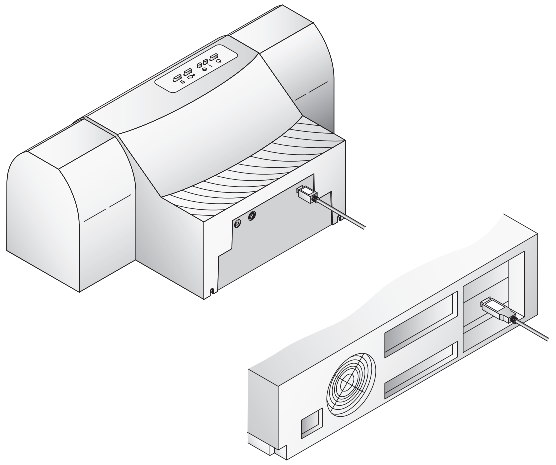

- After a few moments, Windows should detect and attempt to install the printer. You will be prompted with a dialog box like the one shown here:

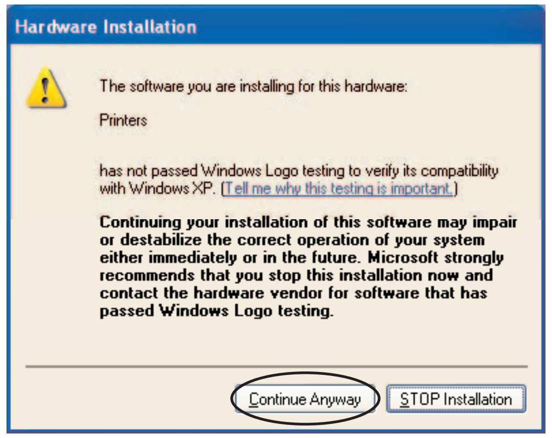

- Click **Continue Anyway** to continue the installation. Once installed, the "CD/DVD Printer 6" icon will appear in the Printer's folder: